ELECOMP CAPSTONE
VIRTUAL SUMMIT
FRIDAY, MAY 8, 2020

THE UNIVERSITY OF RHODE ISLAND

THINK BIG WE DO™

# Polygon Scan Head Integration

Integration of a Polygon based laser scanning head into an existing controller platform

**Team Members:** Nick Schmidt (ELE), Travis Frink (ELE/CPE), Rory Foley (ELE)

CAMBRIDGE TECHNOLOGY
A Novanta Company

**Technical Directors: Mark Lucas, Seethram Sivam**

## Project Motivation

As part of its product line, Cambridge Technology produces a polygon-based laser scanning head. However, the system that controls its inputs and outputs is produced by an outside, competing company. Adapting Cambridge Technology's existing laser scanning controller to support polygon scan heads will provide a significant economic advantage to the company and create greater continuity for its customers. The advantage of using a polygon scan head lies in its ability to process raster-type images at high speeds. The current scan head controller is capable of scanning raster images, but it faces mechanical limitations in how fast its individual mechanically controlled mirrors, or galvanometers, can position the laser. The target technology uses mirrors affixed to a disc with several flat, mirrored faces rotating at a constant rate, which will replace the galvanometer for one axis. This will ultimately allow significantly faster raster scanning and improved resolution of the system.

## Key Accomplishments

- **System Familiarity:** The ScanMaster Controller uses the Xilinx Zynq-7020 at its core to process and compute raster and vector data coming from ScanMaster Designer [**Fig. 3**]. Becoming familiar with the system first required learning the Xilinx SoC platform and development tools. This included understanding how the hardware and software components of the system function and communicate.
- **Code Familiarity:** Once the Zynq system and development tools were understood familiarity with Cambridge Technology's current code base was required to begin development. Consisting of over 50,000 lines of C, C++, and Verilog, components of interest had to be identified and investigated to determine the based ways to integrate polygon scan head functionality into the system.
- **1-bit per pixel processing:** Previously the system had a resolution of 8 bits per pixel allowing varying pixel intensity for raster images. Changing to a 1-bit per pixel data format was a requirement for the system to enable scanning rates fast enough to keep up with the new polygon scan head. Even with this change, the system is still able to emulate variable pixel intensity using dithering techniques.
- **I/O board:** A new input/output board was developed to take the place of the board that was in the control box when we received it [**Fig. 2**]. This was done using the old PCB layout as a baseline to design a board that would allow us to use parts from the control box we received to provide a functional, clean-looking prototype to our technical directors. The board provides the wiring needed to connect the SMC to the scan head, power, and various other circuitry. All of the external connectors are directly mounted on this PCB.
- **Polygon Speed Control:** Prior to a fixed software implementation the polygon scan head required basic control to enable the system, set its speed mode, and wait for its speed synchronization. Using Cambridge Technology's ScanScript language these preliminary functions were implemented and used to debug functionality such as laser timing.
- **Laser Timing:** In order to properly position raster images scanned from the system a delay was added to the laser firing based on the polygon rotation rate and workspace dimensions [**Fig. 4**]. After determining laser timing analytically the resulting function was implemented in the SMC software to allow the passing of the delay to the system firmware where the delay is executed. The system hardware was also changed to detect facet transitions in the polygon to properly delay the raster scanning stream and fire in synchronization for each raster line.
- **Polygon scan head integration:** The hardware, firmware, and software of the system had to be modified to enable control of the new polygon system. Using the facet signals from the polygon scan head the laser timing calculations were implemented to properly scan the image.
- **Polygon error correction:** During manufacturing errors may be introduced in the polygon facets that will cause deviations in the laser path that will differ per facet. These errors can be corrected for by adding per facet corrections in the software. These correction values called wobble and delay cause offsets in the y and x direction respectively for each facet. Once determined by the user these correction values can be set by the user using ScanScript.
- **ScanScript integration:** Cambridge Technology's ScanScript language is a custom scripting language designed to allow low-level control of the ScanMaster Controller and related devices. By adding additional ScanScript functions to the system users are now able to control various components of the polygon scan head. These include enabling the polygon, setting its speed and waiting for its speed synchronization. ScanScript is also used to set per facet error correction values for the polygon.

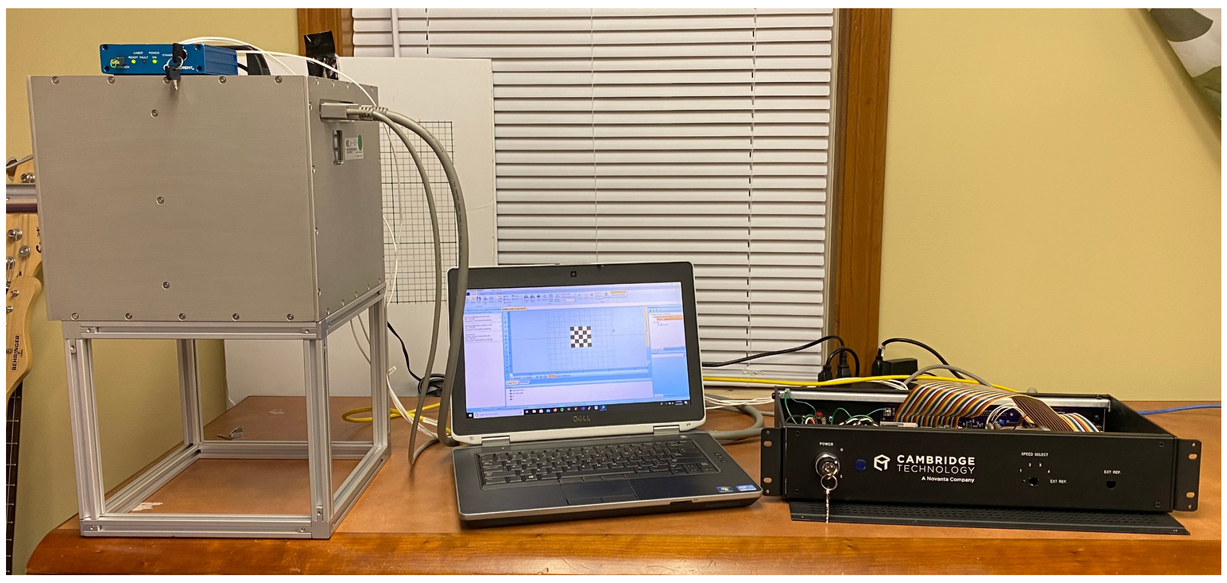

**The new Polygon scan head setup. Shown left is the polygon scan head on top of a T-slot mount. In the center is a laptop running ScanMaster Designer. On the Right is the control box including the new I/O board.**

## Anticipated Best Outcome

As of April 26th 2020 the anticipated best outcome for the project was met. The polygon-based scan head is now able to scan images while being controlled by the ScanMaster Controller. A user is now able to use Cambridge Technology's ScanMaster Designer software to import images, connect to the controller, and set scanning parameters using the ScanScript language. This functioning prototype is delivered as a closed-box system that only requires a typical power cable, two cables to the scan head, and an ethernet cable to the user PC. This system will be further refined to create a marketable product package for Cambridge Technology's customers.

## Project Outcome

The Anticipated Best Outcome was achieved.

We were able to deliver a functional prototype to our technical directors that will be further refined to produce a professional product to market to customers.

## Figures

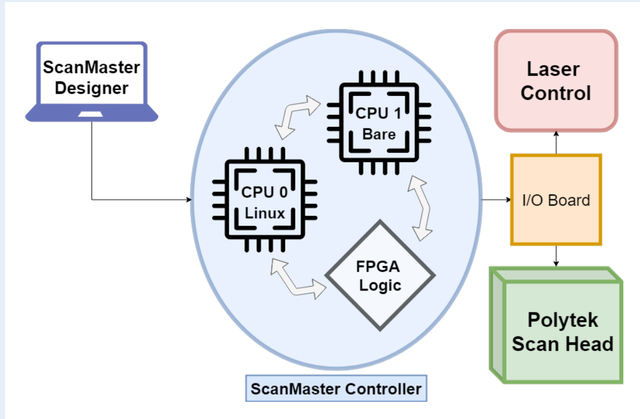


**ScanMaster Designer has a single TCP connection between itself and the SMC while the two ARM cores and programmable logic on the SMC are capable of communication among each other. The programmable logic on the Zynq system provides the endpoint of control for the laser and polygon scan head.**

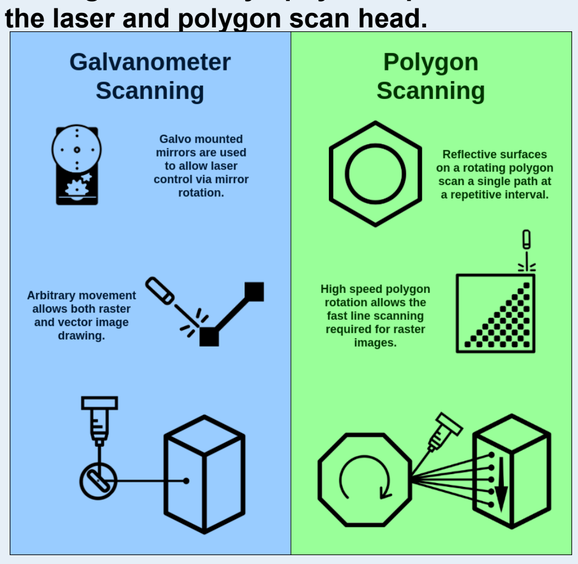


**Both galvo and polygon-based scanning systems are capable of rendering raster images, but polygon-based scanners are capable of doing so at much higher speeds. On the other hand, fully galvo based scanners can scan vector images as well as raster images.**

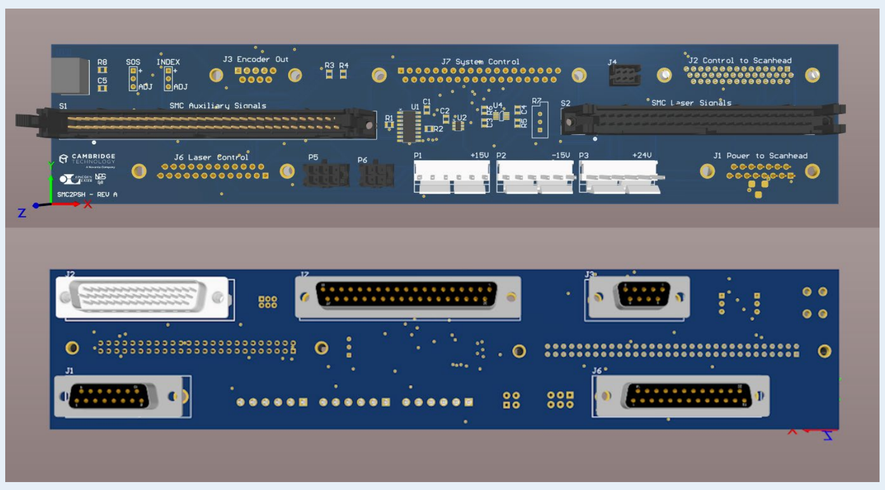

**A 3D render of the I/O PCB using Altium Designer. This PCB enables interaction with the Polygon scan head using the ScanMaster Controller.**

ELECOMP Capstone Program Director: Professor Harish R D Sunak

email: sunak@ele.uri.edu telephone: 401-874-5859

ELECOMP Website: https://uri.edu/elecomp-capstone